340 BACKUP LAMP CIRCUIT

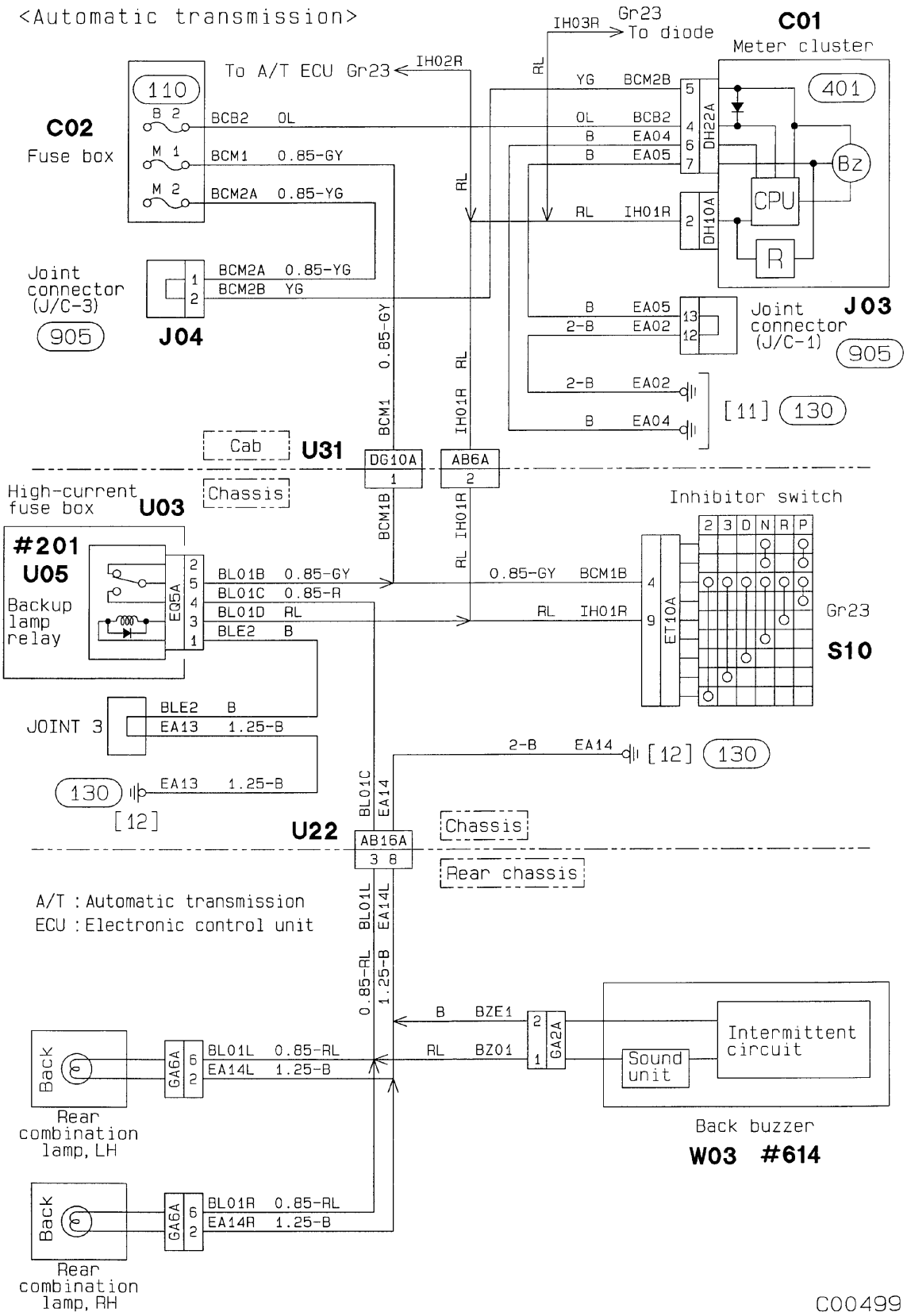

Return to Table of Contents